IJARSE, Vol. No.3, Issue No.9, September 2014 ISSN-2319-8354(E)

IMPLEMENTATION AND ANALYSIS OF SPACE DIVERSITY TECHNIQUE TO OVERCOME FADING

[1]Mukta , [2]Mr. Vikas Kumar,[3]Dr. Rajesh Goel

[1]PG Student, SGI, [2]AP & HOD, ECE Deptt, SGI, [3]Professor & Director SGI

Samalkha Group of Institution (SGI), Samalkha (India)

ABSTRACT

This work shows some general fading mitigation techniques like – Diversity combining technique which improves and stabilizes link quality by utilizing multiple independent signal paths for communication. Orthogonal frequency-division multiplexing (OFDM) is a frequency-division multiplexing (FDM) scheme utilized as a digital multi-carrier modulation method. A large number of closely-spaced orthogonal sub-carriers are used to carry data. The data are divided into several parallel data streams or channels, one for each sub-carrier. Each sub-carrier is modulated with a conventional modulation scheme at a low symbol rate, maintaining total data rates similar to conventional single-carrier modulation schemes in the same bandwidth. Power control technique which provides a flexible tool for exploiting the degree of freedom offered by wireless channel i.e. by throughput enhancing power allocation for single link transmission and interference management for multilink scenarios. Channel coding and interleaving technique, an elaborate cross-checking technique to overcome transmission errors. Rake Receiver Technique, combine the time delayed versions of the original signal transmission in order to improve the signal to noise ratio at the receiver.

Index Terms: Diversity, OFDM, Doppler Shift, Rake receiver, Multipath Propagation.

I. INTRODUCTION

As a matter of fact, in mobile communication [1], the growth has been slow and coupled to various technological improvements. To provide wireless communication to the whole world was a dream before the development of cellular concept by bell laboratories in the 1960s and 1970s. With the development of highly reliable, miniature, solid state radio frequency hardware in 1970s, the wireless communication era came into existence. The recent exponential growth in cellular and personal communication system throughout the world has been possible because of the new technologies radio developed in 1970s, which are mature today. Further, the future growth of consumer based mobile and portable communication systems will be coupled closely to the allocations of radio spectrum and various regulatory decisions which affect or support new or extended services as well as to the consumer requirements and technological advancements in the signal process, access and network areas. In U.S., by 1934, municipal police radio systems and 58 state police stations had adopted amplitude modulation mobile communication system for public safeguards. In 1935, Armstrong invented and demonstrated the frequency modulation for the first time. World War 2 accelerated the improvement in the manufacturing and miniaturization capabilities. These capabilities were put to use in large one way and two way consumer radio and television system following the war. The no. of U.S. mobile users raised from several

thousand in 1940 to 86000 by 1948, 695000 by 1958 and about 1.4 million users in 1962. As a matter of fact, the vast majority of mobile users in 1960s was not connected to public switched Telephone Network and hence was not able to directly dial telephone numbers from their vehicles. However, with the boom in CB radio and cordless appliances such as garage door openers and telephones the number of users of mobile and portable radio in 1995 was about 100 million or 37% of total U.S. population. The number of worldwide cellular telephone users grew from 25,000 in 1984 to about 25million in 1993 and since then subscription based wireless services has been experiencing customer growth rates well in excess of 50% per year. The worldwide subscriber base of cellular and PCS subscribers is approximately 630 million as of late 2001, compared with approximately 1 billion wired telephone lines. In the first few years of 21st century, it is obvious that there will be an equal number of wireless and conventional wire line customers across the world.

II. FREQUENCIES FOR RADIO TRANSMISSION

Radio transmission can take place using many different frequency bands. Each frequency band exhibits certain advantages & disadvantages. Fig. 1.1 gives a rough overview of the frequency spectrum [2] that can be used for data transmission. The figure shows frequencies starting at 300Hz & going up to over 3000THz.

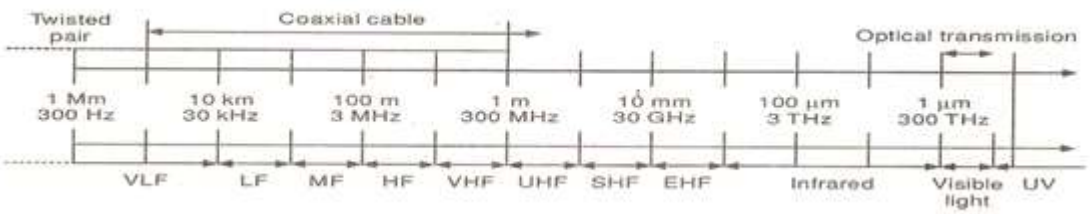

Fig.1 Frequencies for Radio Transmission

III. RADIO CHANNEL CHARACTERIZATION & MODELING

Fading [3] is used to describe the rapid fluctuation of amplitude, phase or multipath delays of a radio signal over a short period of time or travel distance, so that large scale path loss effects may be ignored.

Fading is caused by interference between two or more versions of transmitted signal which arrive at the receiver at slightly different times. These waves called multipath waves combine at the receiver antenna to give a resultant signal which can vary widely in amplitude & phase, depending on the distribution of the intensity & relative propagation time of wave & bandwidth of transmitted signal.

Multipath in radio channel [4] creates small scale fading effects. The three important effects are

- Rapid change in signal strength over a small travel distance.
- Random frequency modulation due to varying Doppler shifts on different multipath signal.
- Time dispersion (echoes) caused by multipath propagation delays.

In urban areas, fading occurs because the height of mobile antennas are well below the height of surroundings

structures, so there is no single line of sight path to base station. Even when a line of sight exists, multipath still occurs due to reflection from the ground & surroundings structures. The incoming radio waves arrive from different direction with different propagation delays. The signal received by the mobile at any point in space may consist of a large number of plane waves having randomly distributed amplitude, phase and angles of arrival. These multipath components combine vector ally add the receiver antenna and can cause the signal received by the The difference in path lengths travelled by the wave from source S to mobile at points X & Y is $\Delta l = d\cos\theta = v\Delta t\cos\theta$, where Δt is time required for the mobile to travel from X to Y & θ is assumed to be the same at points X & Y, since the source is assumed to be very far away. The phase change in the received signal due to difference in path lengths is therefore

$$\Delta\varphi = (2\Pi\ \Delta l)/\lambda = (2\Pi\ v\Delta t\cos\theta)/\ \lambda$$

And hence apparent change in frequency or Doppler shift (fd) is given as

$$fd = 1/(2\Pi).\ (\Delta\varphi)/\ \Delta t = v\cos\theta/\ \lambda$$

This equation relates Doppler shift to mobile velocity and spatial angle between direction of motion of mobile and direction of arrival of wave. It can be seen from last equation that if mobile is moving towards the direction of arrival of wave, the Doppler shift is positive and if mobile is moving away from the direction of arrival of wave, the Doppler shift is negative. Mobile to distort or fade. Even when a mobile receiver is stationary the received signal may fade due to movement of surroundings objects in radio channel.

If the object in radio channel are static and motion is only due to that of mobile then fading is purely a spatial phenomenon. The spatial variations of the resulting signals are seen as temporal variations by the receiver as it moves to multipath field. Due to constructive and destructive effects of multipath waves summing at various points in space a receiver moving at high speed can pass through several fades in a small period of time. In more serious case, a receiver may stop at particular location at which the received signal is in deep fade. Maintaining good communication can then become very difficult. Although passing vehicles or people walking in the presence of mobile can often disturb the field pattern, thereby diminishing likelihood of the received signal remaining in a deep null for a long period of time.

Due to relative motion between mobile and base station, each multipath waves experience an apparent shift in frequency. The shift in the received signal frequency due to motion is called Doppler shift [1] and is directly proportional to velocity and direction of motion of mobile with respect to the direction of the received multipath wave.

IV. FACTOR AFFECTING RADIO CHANNEL FADING

The factor in the radio propagation channel affects fading includes:

4.1 Multipath Propagation: The presence of reflecting objects and scatters in the channel creates a constantly changing environment that dissipates signal energy in amplitude, phase and time. These effects result in multiple versions of transmitted signal that arrive at the receiving antenna, displaced with respect to one another in time and spatial orientation. The random phase and amplitude of different multipath components cause fluctuation in signal strength thereby inducing fading, signal distortion or both.

4.2 Speed of Mobile: The relative motion between base station & mobile results in random frequency modulation due to different Doppler shifts on each of the multipath components. Doppler shift will be positive

or negative depending on whether the mobile receiver is moving towards or away from the base stations.

Doppler shift: - Consider a mobile is moving at a constant velocity v, along a path segment having length d between points X & Y, while it receives signal from a remote source S as shown in figure [2.1].

Fig.2 Doppler Shifts [1]

The difference in path lengths travelled by the wave from source S to mobile at points X & Y is $\Delta l = d\cos\theta = v\Delta t\cos\theta$, where Δt is time required for the mobile to travel from X to Y & θ is assumed to be the same at points X & Y, since the source is assumed to be very far away. The phase change in the received signal due to difference in path lengths is therefore

$$\Delta\varphi = (2\Pi\ \Delta l)/\lambda = (2\Pi\ v\Delta t\cos\theta)/\ \lambda$$

And hence apparent change in frequency or Doppler shift (fd) is given as

$$fd = 1/(2\Pi).\ (\Delta\varphi)/\ \Delta t = v\cos\theta/\ \lambda$$

This equation relates Doppler shift to mobile velocity and spatial angle between direction of motion of mobile and direction of arrival of wave. It can be seen from last equation that if mobile is moving towards the direction of arrival of wave, the Doppler shift is positive and if mobile is moving away from the direction of arrival of wave, the Doppler shift is negative.

4.3 Speed of the Surrounding Objects: If object in radio channel are in motion, they induce a time varying Doppler shift on multipath components. If surrounding objects move at a greater rate than mobile, then this effect dominates fading otherwise motion of surroundings objects may be ignored & only the speed of the mobile is need to be considered.

4.4 Transmission bandwidth of the signal: If the transmitted radio signal bandwidth is greater than the bandwidth of channel, the received signal will be distorted, but the received signal strength will not fade much over a local area i.e. fading will not be significant. As will be shown, the bandwidth of channel can be quantified by coherence bandwidth which is related to specific multipath structure of channel. The coherence bandwidth is a measure of maximum frequency difference for which signals are still strongly correlated in amplitude. If the transmitted signal has a narrow bandwidth as compared to channel, the amplitude of signal will change rapidly, but the signal will not distorted in time. Thus, statistics of small scale signal strength &the likelihood of signal smearing appearing over small scale distances are very much related to specific amplitude & delays of multipath channel as well as bandwidth of transmitted signal.

V. SOME GENERAL CHANNEL FADING MITIGATION TECHNIQUE

Diversity Technique: In telecommunications, a diversity scheme [9] refers to a method for improving the reliability of a message signal by utilizing two or more communication channels with different characteristics. Diversity plays an important role in combating fading and co-channel interference and avoiding error bursts. It is based on the fact that individual channels experience different levels of fading and interference. Multiple versions of the same signal may be transmitted and/or received and combined in the receiver. Alternatively, a redundant forward error correction code may be added and different parts of the message transmitted over different channels. Diversity techniques may exploit the multipath propagation, resulting in a diversity gain, often measured in decibels.

The following classes of diversity schemes can be identified:

5.1 Time diversity [10]: Multiple versions of the same signal are transmitted at different time instants. Alternatively, a redundant forward error correction code is added and the message is spread in time by means of bit-interleaving before it is transmitted. Thus, error bursts are avoided, which simplifies the error correction.

5.2 Frequency diversity [11]: The signal is transferred using several frequency channels or spread over a wide spectrum that is affected by frequency-selective fading. Middle-late 20th century microwave radio relay lines often used several regular wideband radio channels, and one protection channel for automatic use by any faded channel. Later examples include:

a) OFDM modulation in combination with subcarrier interleaving and forward error correction
b) Spread spectrum, for example frequency hopping or DS-CDMA.

5.3 Space diversity [11]: The signal is transferred over several different propagation paths. In the case of wired transmission, this can be achieved by transmitting via multiple wires. In the case of wireless transmission, it can be achieved by antenna diversity using multiple transmitter antennas (transmit diversity) and/or multiple receiving antennas (reception diversity). In the latter case, a diversity combining technique is applied before further signal processing takes place. If the antennas are far apart, for example at different cellular base station sites or WLAN access points, this is called macro diversity. If the antennas are at a distance in the order of one wavelength, this is called micro diversity. A special case is phased antenna arrays, which also can be utilized for beam forming, MIMO channels and Space–time coding (STC).

5.4 Polarization diversity [12]: Multiple versions of a signal are transmitted and received via antennas with different polarization. A diversity combining technique is applied on the receiver side.

5.5 Multiuser diversity [13]: Multiuser diversity is obtained by opportunistic user scheduling at either the transmitter or the receiver. Opportunistic user scheduling is as follows: The transmit selects the best user among candidate receivers according to the qualities of each channel between the transmitter and each receiver. In FDD systems, a receiver must feedback the channel quality information to the transmitter with the limited level of resolution.

Antenna diversity [14], also known as space diversity, is one in a superset of wireless diversity schemes that utilizes two or more antennas to improve the quality and reliability of a wireless link. Often, especially in urban and indoor environments, there is not a clear line-of-sight (LOS) between transmitter and receiver. Instead the

signal is reflected along multiple paths before finally being received. Each of these bounces can introduce phase shifts, time delays, attenuations, and even distortions that can destructively interfere with one another at the aperture of the receiving antenna. Antenna diversity is especially effective at mitigating these multipath situations. This is because multiple antennas afford a receiver several observations of the same signal. Each antenna will experience a different interference environment. Thus, if one antenna is experiencing a deep fade, it is likely that another has a sufficient signal. Collectively such a system can provide a robust link. While this is primarily seen in receiving systems (diversity reception), the analog has also proven valuable for transmitting systems (transmit diversity) as well.

VI. ORTHOGONAL FREQUENCY DIVISION MULTIPLEXING TECHNIQUE (OFDM):

Orthogonal frequency-division multiplexing (OFDM) - essentially identical to Coded OFDM (COFDM) and Discrete multi-tone modulation (DMT) - is a frequency-division multiplexing (FDM) scheme utilized as a digital multi-carrier modulation method. A large number of closely-spaced orthogonal sub-carriers are used to carry data. The data are divided into several parallel data streams or channels, one for each sub-carrier. Each sub-carrier is modulated with a conventional modulation scheme (such as quadrature amplitude modulation or phase shift keying) at a low symbol rate, maintaining total data rates similar to conventional single-carrier modulation schemes in the same bandwidth.

OFDM [18] has developed into a popular scheme for wideband digital communication, whether wireless or over copper wires, used in applications such as digital television and audio broadcasting, wireless networking and broadband internet access.

The primary advantage of OFDM over single-carrier schemes is its ability to cope with severe channel conditions - for example, attenuation of high frequencies in a long copper wire, narrowband interference and frequency-selective fading due to multipath - without complex equalization filters. Channel equalization is simplified because OFDM may be viewed as using many slowly-modulated narrowband signals rather than one rapidly-modulated wideband signal. The low symbol rate makes the use of a guard interval between symbols affordable, making it possible to handle time-spreading and eliminate intersymbol interference (ISI). This mechanism also facilitates the design of single-frequency networks, where several adjacent transmitters send the same signal simultaneously at the same frequency, as the signals from multiple distant transmitters may be combined constructively, rather than interfering as would typically occur in a traditional single-carrier system.

6.1 Example of Applications

The following list is a summary of existing OFDM based standards and products. For further details, see the Usage section in the end of the article.

Cable

- ADSL and VDSL broadband access via POTS copper wiring.
- Power line communication (PLC).
- Multimedia over Coax Alliance (MoCA) home networking.

Wireless

- The wireless LAN radio interfaces IEEE 802.11a and HIPERLAN/2.

- The digital radio systems DAB/EUREKA 147, DAB+, Digital Radio Mondiale, HD Radio, T-DMB and ISDB-TSB.
- The terrestrial digital TV system DVB-T.
- The terrestrial mobile TV systems DVB-H, T-DMB, ISDB-T and Media FLO forward link.
- The cellular communication systems Flash-OFDM and the High Speed OFDM Packet Access (HSOPA) ("Super 3G") 3GPP Long Term Evolution (LTE) suggestion.
- The Wireless MAN / Fixed broadband wireless access (BWA) standard IEEE 802.16 (or WiMAX).
- The Mobile Broadband Wireless Access (MBWA) standards IEEE 802.20, IEEE 802.16e (Mobile WiMAX) and WiBro.
- The wireless Personal Area Network (PAN) Ultra wideband (UWB) IEEE 802.15.3a implementation suggested by WiMedia Alliance.

6.2 Key features

The advantages and disadvantages listed below are further discussed in the Characteristics and principles of operation section.

Advantages

- Can easily adapt to severe channel conditions without complex equalization
- Robust against narrow-band co-channel interference
- Robust against Intersymbol interference (ISI) and fading caused by multipath propagation
- High spectral efficiency
- Efficient implementation using FFT
- Low sensitivity to time synchronization errors
- Tuned sub-channel receiver filters are not required (unlike conventional FDM)
- Facilitates Single Frequency Networks, i.e. transmitter macro diversity.

VII. RAKE RECIEVER TECHNIQUE

A rake receiver [24] is a radio receiver designed to counter the effects of multipath fading. It does this by using several "sub-receivers" called fingers, that is, several correlator each assigned to a different multipath component. Each finger independently decodes a single multipath component; at a later stage the contribution of all fingers are combined in order to make the most use of the different transmission characteristics of each transmission path. This could very well result in higher signal-to-noise ratio (or Eb/N0) in a multipath environment than in a "clean" environment.

The multipath channel through which a radio wave transmits can be viewed as transmitting the original (line of sight) wave plus a number of multipath components. Multipath components are delayed copies of the original transmitted wave traveling through a different echo path, each with a different magnitude and time-of-arrival at the receiver. Since each component contains the original information, if the magnitude and time-of-arrival (phase) of each component is computed at the receiver (through a process called channel estimation), then all the components can be added coherently to improve the information reliability.

The basic idea of RAKE receiver was first given by price and green. In outdoor, the delay between multipath components is usually large and, if the chip rate is properly selected, the low autocorrelation property of a CDMA spreading sequence can assure that multipath components will appear nearly uncorrelated with each other. However the RAKE receiver in IS-95 CDMA has been found to perform poorly in indoor environments, which is to be expected since the multipath delay spread in indoor channel (=100ns) are much smaller than IS_95 chip duration (=800ns). In such cases, a RAKE will not work since multipath is unresolvable, and Rayleigh flat fading typically occurs within a single chip period.

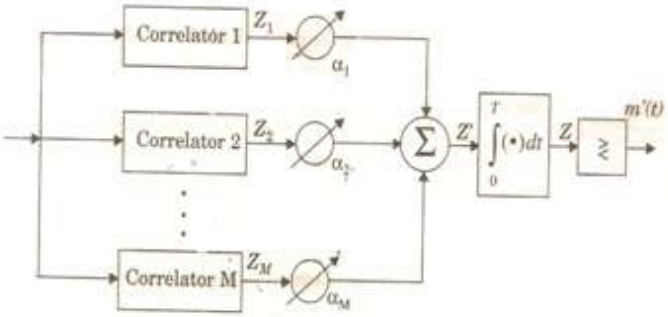

VIII. CONCLUSION

This work presents the implementation and analysis of space diversity technique used in radio channels to overcome the effect of fading. Here, it is discussed about the fading, factor that affects the fading and the technique that can overcome the effect of fading. After this, the two branch space diversity technique or diversity combining technique that includes selection diversity combining, equal gain combining and maximum ratio combining is discussed in detail. Here, it is also presented the implementation of selection diversity combining technique in fuzzy logic system. Then attention is focused on taking a Rayleigh fading signal of fixed and variable SNR and passing this to all space diversity combiners. The output of each combiner is measured in dB and compared with one another.

ACKNOWLEDGMENT

The authors would like to thank Department of Electronics and Comm. Engg. , Samalkha group of institutions, Haryana for providing invaluable resources and expertise

REFERENCES

1. Rappaport, T.S., “Wireless Comm, Principle & Practice,” 2nd Ed. 2006.
2. D.Tse and P.Viswanath, “Fundamentals of wireless communication” Cambridge University Press, 2005.
3. Stein, S., “Fading channel Issues in system Engineering,” IEEE Journal on selected areas in communications, February 1987, SAC-5, Vol. No. 2.
4. A.M. Sayeed, “Communication Over multipath fading channels: a frequency perspective chapter in Time Frequency signal, Analysis and processing in Time frequency signal,” a comprehensive

Reference, B. Boashash, Ed., Elsevier, 2003, pp. 549-557.

5. Bernard Sklar, "Rayleigh Fading channels in mobile digital communication System," Part 1 characterization, IEEE communication July1997, Magazine 35(7), pp. 90-100.
6. J. Hamalainen, R. Wichman, "Performance of Transmit Time Selection Diversity in Multipath Fading Channels,"The 6th International symposium on wireless Personal Multimedia Comm., Oct. 2003.
7. "A MATLAB-based Object-Oriented Approach to Multipath Fading Channel Simulation," A white paper by C.D. Iskander. Feb, 2008
8. Per Lveren, "Methods for testing radiated performance of diversity and MIMO enabled terminals," CTO-Satimo, Seattle Feb.2008, www.satimo.com.
9. İbrahim Altunbaş "Performance of serially concatenated coding schemes for MIMO systems AEU ," International Journal of Electronics and Communications, January 2007 Volume 61, Issue 1, 2, Pages 1-9
10. J. Hamalainen, R. Wichman, "On the site Selection Diversity Transmission", IEEE International symposium on Personal, Indoor and Mobile Radio communications, Sep. 2003.
11. Brown W.C.T, "Antenna Diversity for Mobile Terminals," PhD Dissertation, university of Surrey, 2002.

Author Profile

Mukta received the M.Tech Degree in Electronics and Communication Engineering and B.Tech Degree in Electronics and Communication Engineering from Samalkha group of institutions in 2014 and Shri Balwant Institute of Technology in 2011, respectively.

Mr. Vikas Kumar

Presently he is working as HOD in Electronics and Communication Engineering department at Samalkha group of institutions, Samalka, Haryana, India.

Dr. Rajesh Goel

Presently he is working as Director in Samalkha Group of Institution, Samalkha, Haryana, India.